Specification

Glacier Bay Claretta Kitchen Faucet With Side Spray

MODEL	STORE SKU#	FINISH
BE56U02NX	1000-013-032	Stainless steel

FEATURES

- Available with 1,2,3 or 4 hole Sink
- 1/2" IPS Connections
- Max Flow Rate: 1.8gpm(6.8L/min) at 60 psi
- Max Countertop Thickness: 1 1/8"
- Spout Reach: 8 21/32"
- Spout Height: 14"
- 30MM Cartridge for Lifetime Drip-free Operation
- With ABS Side Spray
- With Zinc Lever Handle
- Exposed Aerator

CODE COMPLIANCE

- IAPMO Certified: ASME A112.18.1/CSA B125.1
- NSF 61 Section 9
- Calgreen Certified
- Meets AB 1953 Lead Standard
- ADA Compliant

WARRANTY

- Limited Lifetime Warranty

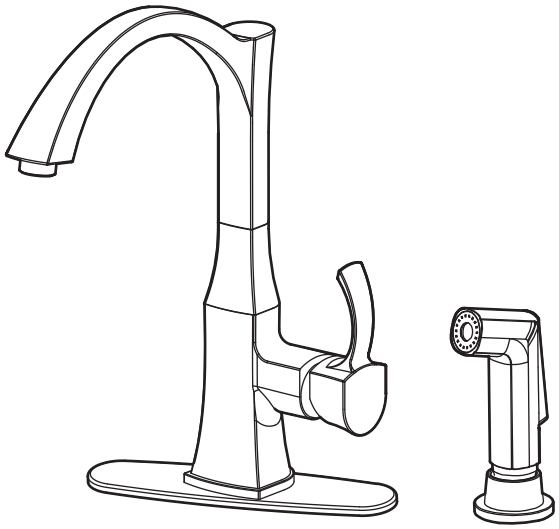

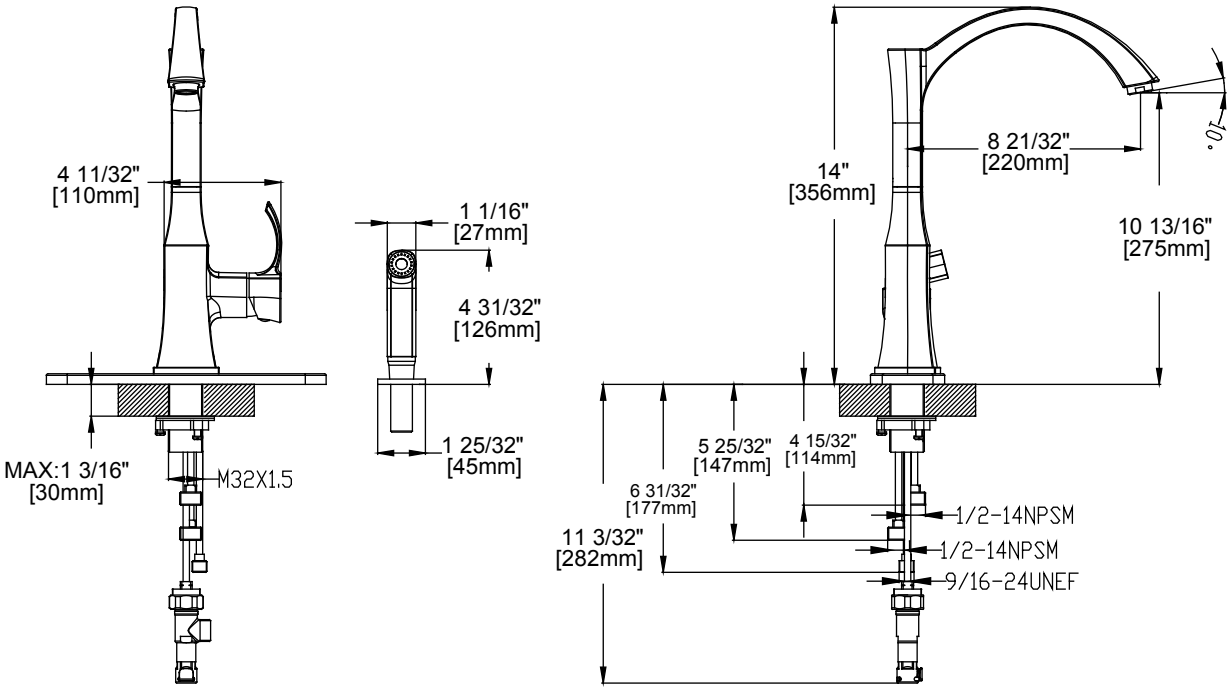

INSTALLATION DIMENSIONS