Single Handle Lavatory Faucet With Push-Up Pop-Up

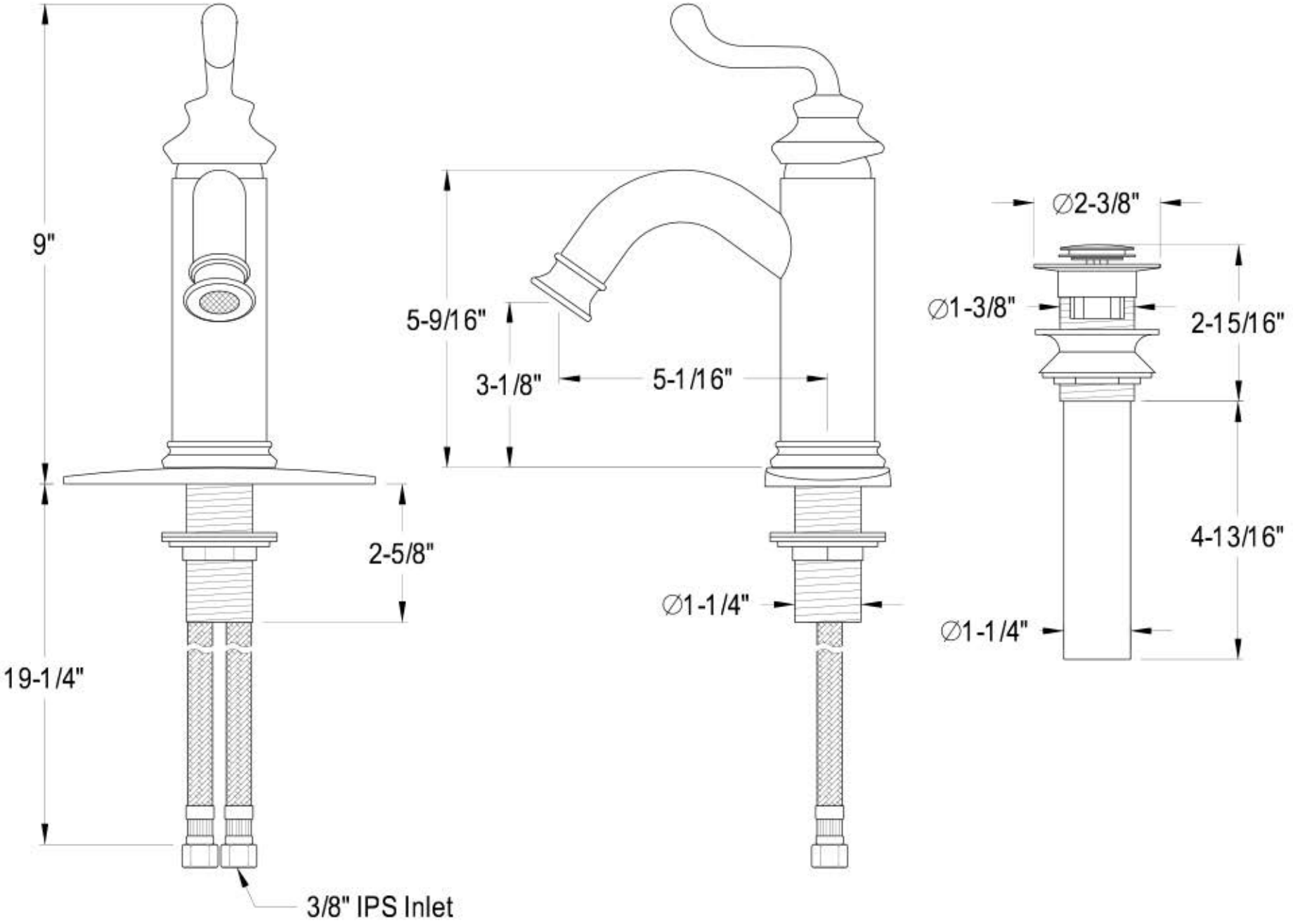

2016-08-D