PFISTER

Venturi™

8”-15” Widespread Faucet

LF-049-VNBB Finish*(BB)* ❑
LF-049-VNCC Finish*(CC)* ❑
LF-049-VNKK Finish*(KK)* ❑
LF-049-VNYY Finish*(YY)* ❑

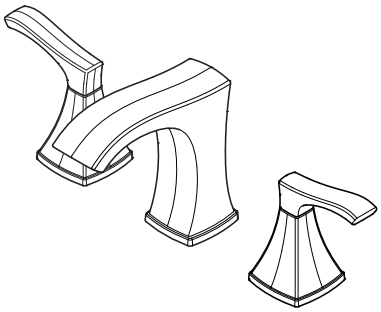

- 3-Hole Installation
- Pforever Seal
- Push & Seal™ Pop-Up

Specifications

Features

- 1.2 GPM Flow Rate
- All Metal Construction
- Mounting Hardware Included
- Quick Install Tool Included
- Pfast Connect
- 3-Hole Installation
- High Arc Spout
- TiteSeal™
- Fixed Hub
- PVD Finish (KK Finish Only)
- Color Coded Connections
- Push & Seal™ Pop-Up
- Pforever Seal Ceramic Disc Valves
- Pforever Warranty®

Code Compliance

Pfister products are designed and manufactured in compliance with the following standards and codes:

- IAPMO Certified
- CSA B125 Certified
- ASME A112.18.1
- NSF 61/9 Annex G (Low lead)
- Cal Green Compliant
- CEC Compliant
- EPA WaterSense Certification 1.2 gpm, 4.5L/Min
- ADA Compliant-ANSI A117.1 (Lever handles only)

Dimensions

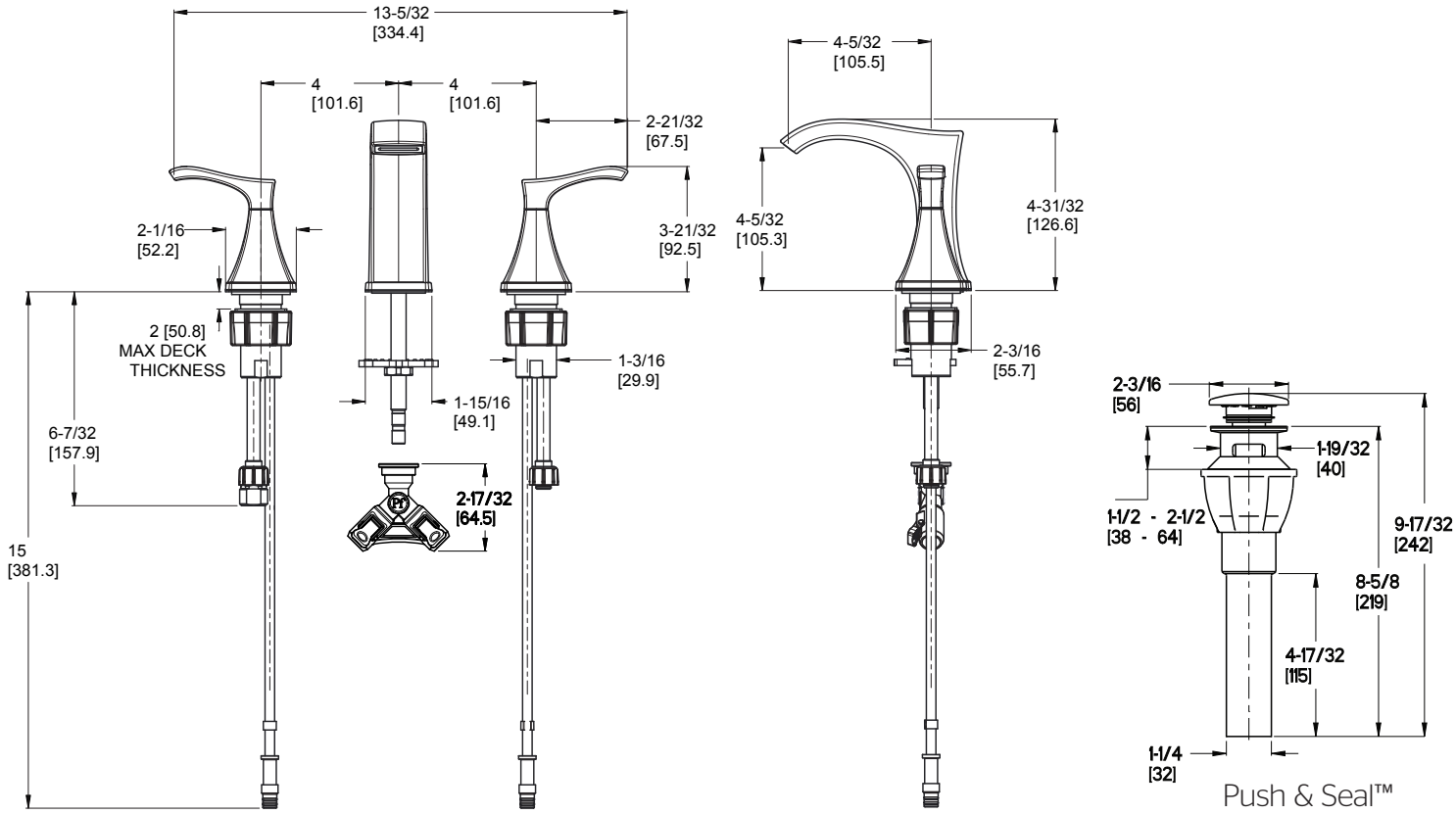

Ø1-1/4 Min to Ø1-1/2 Max. Deck Hole Openings

Copyright © 2016, Pfister Inc.