HOME
DECORATORS
COLLECTION

BF-25413 SHERIDAN JEWELRY ARMOIRE 40"Hx20"Wx12"

INV#1002955723/1002953890

ASSEMBLY INSTRUCTIONS

Made In China

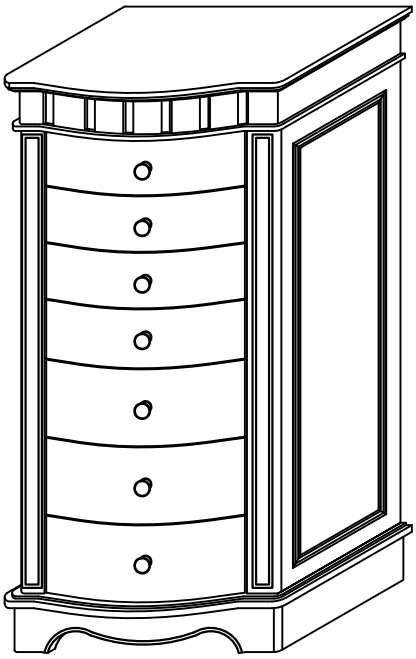

Thank you for purchasing this quality product. Be sure to check all packing material carefully for small parts, which may have came loose inside the carton during shipment. Count all parts and material hardware then compare with parts list to be sure all parts are present.If any parts are missing or damaged,phone, fax or mail to our Customer Service Department for efficient and speedy service. Please indicate the model number and code letter of part(s) needed.

IMPORTANT NOTE:Follow instructions listed below in proper sequence as numbered to assure fast, easy and correct assembly.

# PARTS LIST

| | | |
|---|---|---|
| A 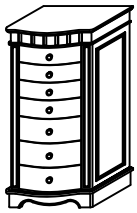 CABINET-1PC | B 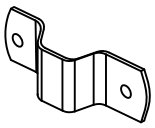 HOOKS-2PCS | C 6mm*3/4" 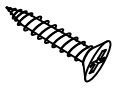 SCREWS-2PCS |
| D GECKOS-2PCS | E 7mm*7/8" 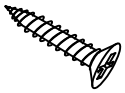 SCREWS-2PCS | F PLASTIC BELT-1PC |
| | | |
| | | |

NOTE:THE SURFACE WITH THE STICKER IS THE BACK SIDE.

# Warning

The anti-tip hardware must be used as part of assembly!

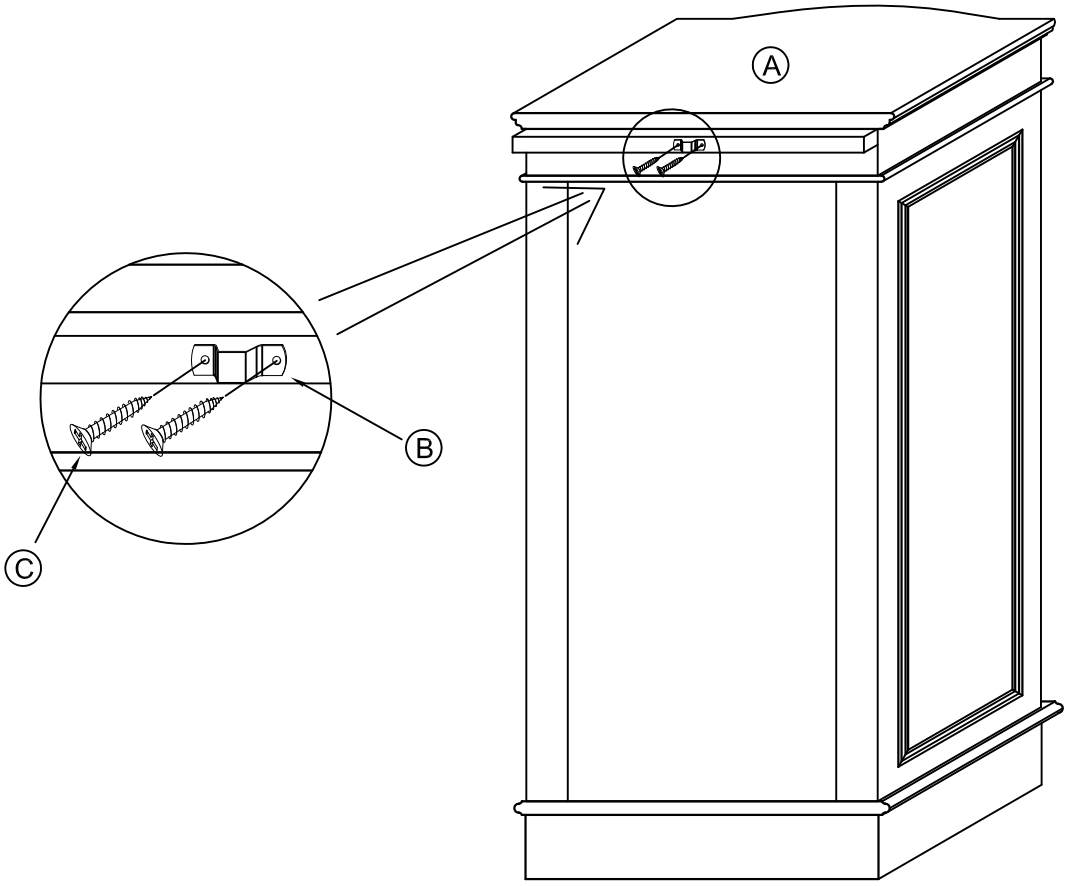


## 1). ASSEMBLE THE HOOKS(B).

- ATTACH 1 HOOK(B) USING 2 SCREWS(C) IN THE PREDRILLED HOLES ON THE REAR OF THE CABINET (A).

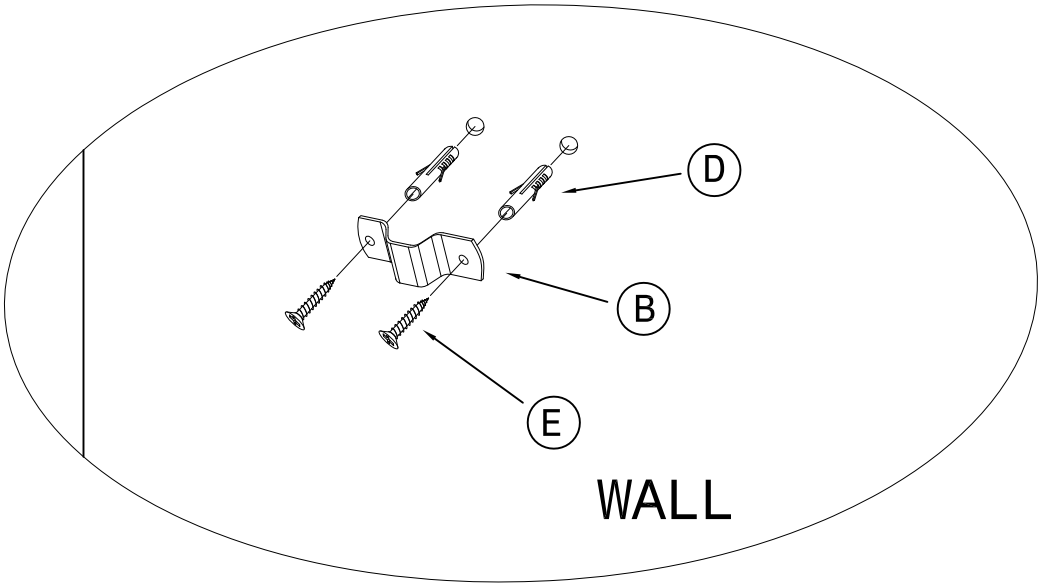


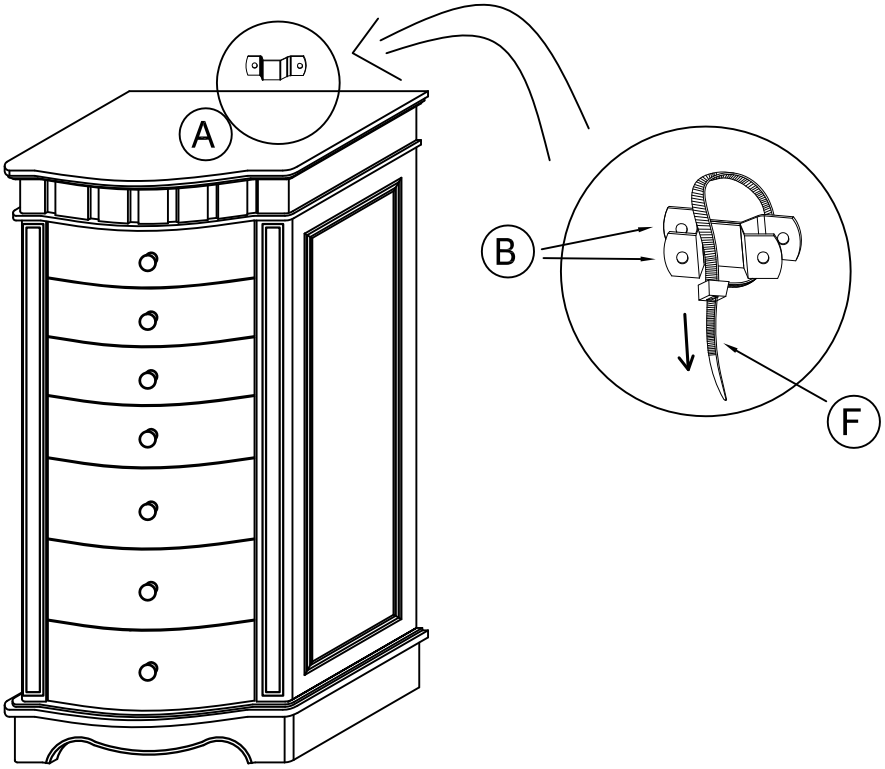


## 2). ASSEMBLE THE ANTI-TIP HARDWARE.

- DRILL 2 HOLES INTO THE WALL, PLEASE REFER TO THE REAR TOP PANEL'S HOLE DISTANCE AND HEIGHT.
- PUT 2 GECKOS(D) INTO THE HOLES IN THE WALL AND ROTATE 2 SCREWS(E) INTO THE
- GECKOS(D).
- CONNECT THE TWO HOOKS(B) WITH A PLASTIC BELT(F).

"IMPORTANT HEALTH NOTICE.

SOME OF THE BUILDING MATERIALS USED IN THIS HOME (OR THESE BUILDING MA TERIALS) EMIT FORMALDEHYDE. EYE, NOSE, AND THROAT IRRITATION, HEADACHE, NAUSEA AND A VARIETY OF ASTHMA-LIKE SYMPTOMS, INCLUDING SHOR TNESS OF BREATH, HAVE BEEN REPORTED AS A RESULT OF FORMALDEHYDE EXPOSURE. ELDERLY PERSONS AND YOUNG CHILDREN, AS WELL AS ANYONE WITH A HISTORY OF ASTHMA, ALLERGIES, OR LUNG PROBLEMS, MAY BE AT GREATER RISK. RESEARCH IS CONTINUING ON THE POSSIBLE LONG-TERM EFFECTS OF EXPOSURE TO FORMALDEHYDE.

REDUCED VENTILATION MAY ALLOW FORMALDEHYDE AND OTHER CONTAMINANTS TO ACCUMULATE IN THE INDOOR AIR. HIGH INDOOR TEMPERA TURES AND HUMIDITY RAISE FORMALDEHYDE LEVELS.WHEN A HOME IS TO BE LOCATED IN AREAS SUBJECT TO EXTREME SUMMER TEMPERA TURES, AN AIR-CONDITIONING SYSTEM CAN BE USED TO CONTROL INDOOR TEMPERA TURE LEVELS. OTHER MEANS OF CONTROLLED MECHANICAL VENTILATION CAN BE USED TO REDUCE LEVELS OF FORMALDEHYDE AND OTHER INDOOR AIR CONTAMINANTS.

IF YOU HAVE ANY QUESTIONS REGARDING THE HEALTH EFFECTS OF FORMALDEHYDE, CONSULT YOUR DOCTOR OR LOCAL HEAL TH DEP ARTMENT."