PFISTER

Arterra™

Single Control Lavatory Faucet

LG42-DEOC Finish*(C)* ❑
LG42-DEOD Finish*(D)* ❑
LG42-DEOK Finish*(K)* ❑
LG42-DEOY Finish*(Y)* ❑

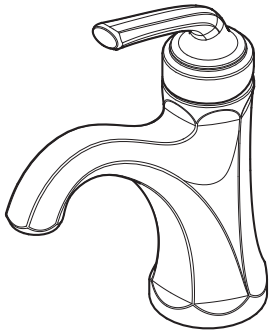

- Single Control
- 1 or 3-Hole Installation
- All Metal Construction

Specifications

Features

- 1.2 GPM Flow Rate
- All Metal Construction
- Mounting Hardware Included
- Optional Deckplate
- Pforever Warranty®

Code Compliance

Pfister products are designed and manufactured in compliance with the following standards and codes:

- IAPMO Certified
- CSA B125 Certified
- ASME A112.18.1
- NSF 61/9 Annex G (Low lead)
- Cal Green Compliant
- CEC Compliant
- EPA WaterSense Certification 1.2 gpm, 4.5 L/Min
- ADA Compliant-ANSI A117.1 (Lever handles only)

Dimensions

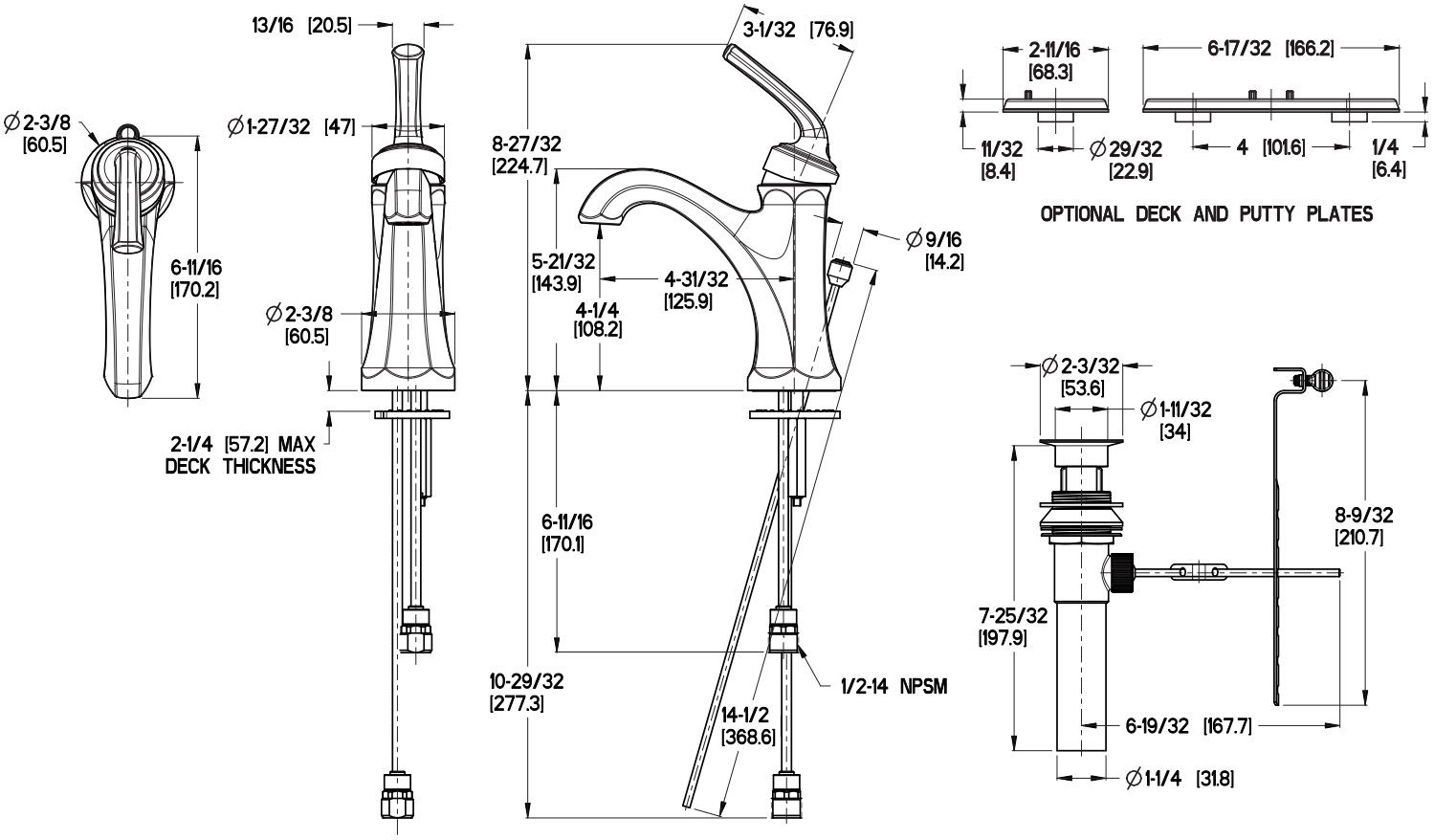

Ø1 Min to Ø1-1/2 Max. Deck Hole Openings

Copyright © 2016, Pfister Inc.