| Bathroom Cabinet | Unit | inch | Model | Ricca-84 |
|---|---|---|---|---|

Cabinet:83.9"x22"x35.8" inch

Handle: 6" inch

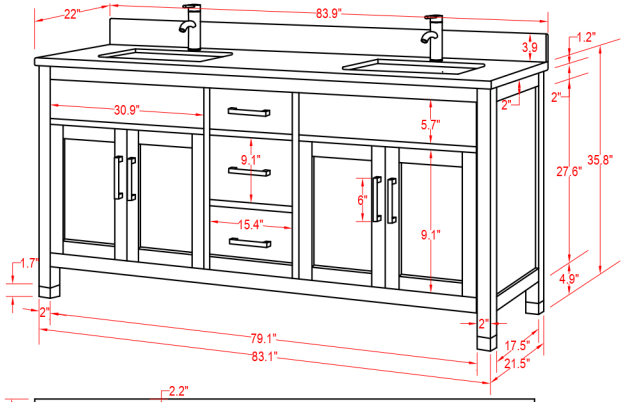


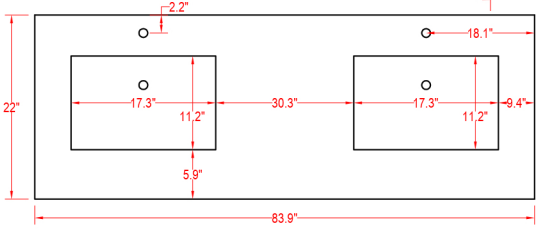


(PLAN)

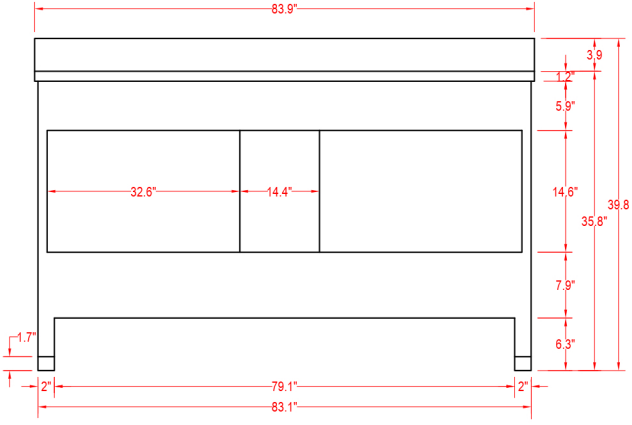


(BACK)