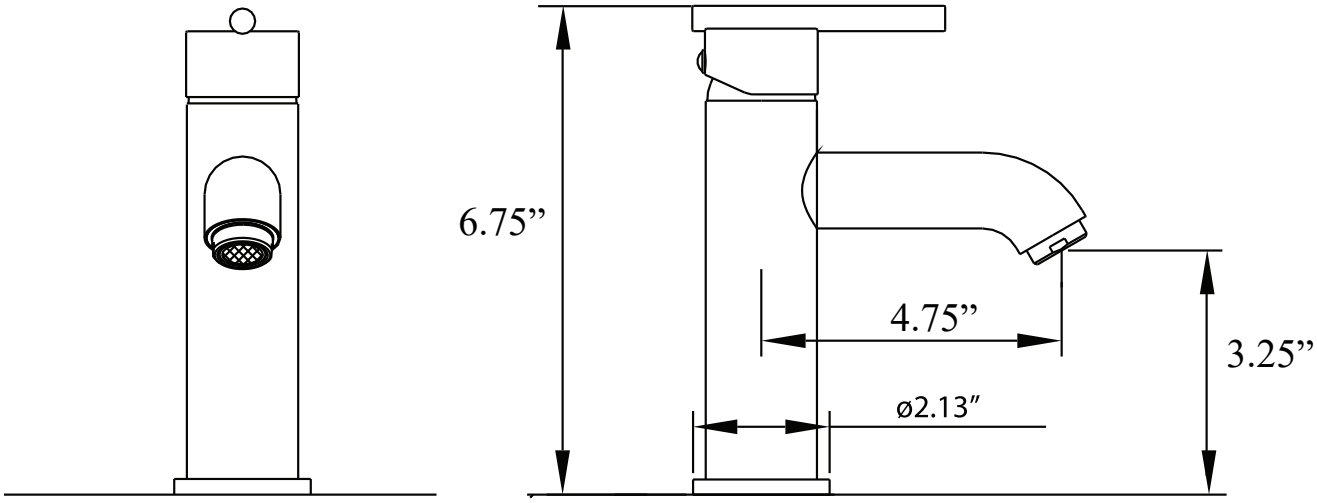YP2801 Series Faucet