BA312C,PB,ORB,SN

18" Towel Bar

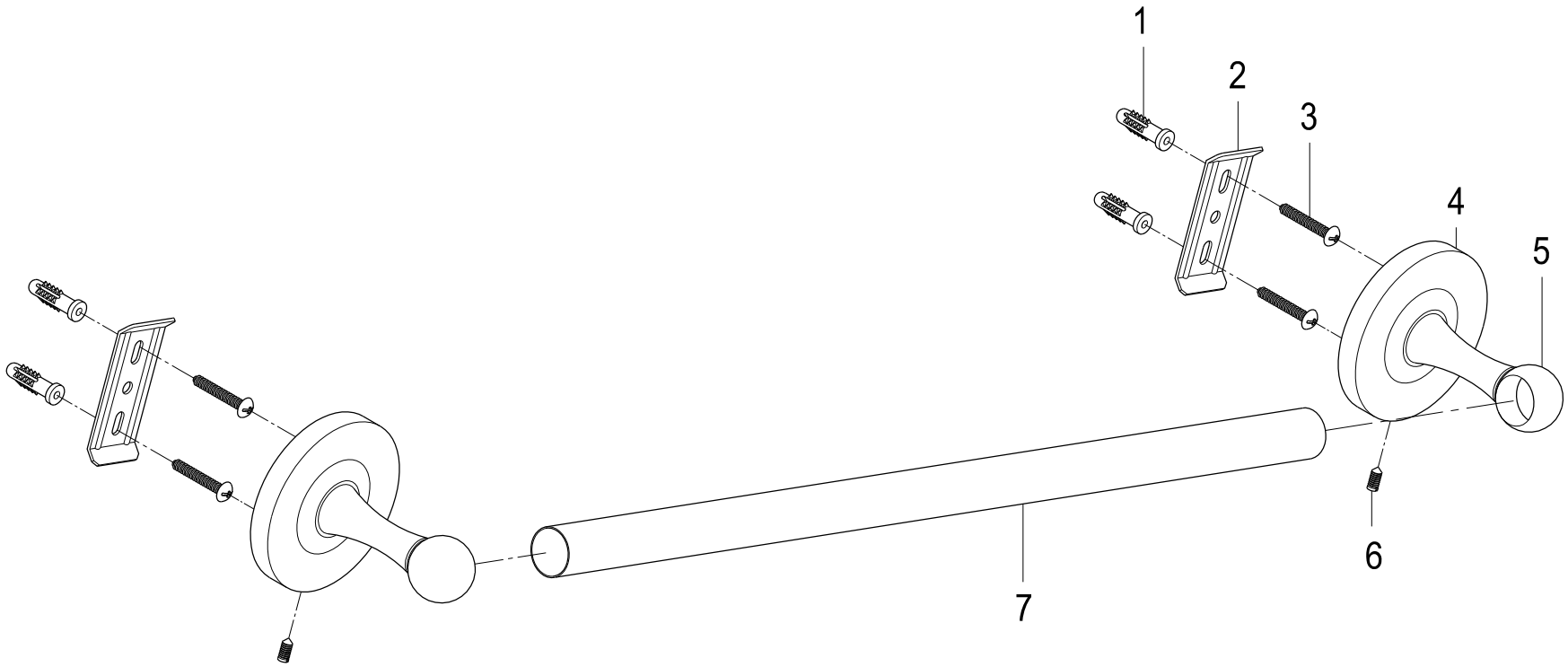

BA314C,PB,ORB,SN

Towel Ring

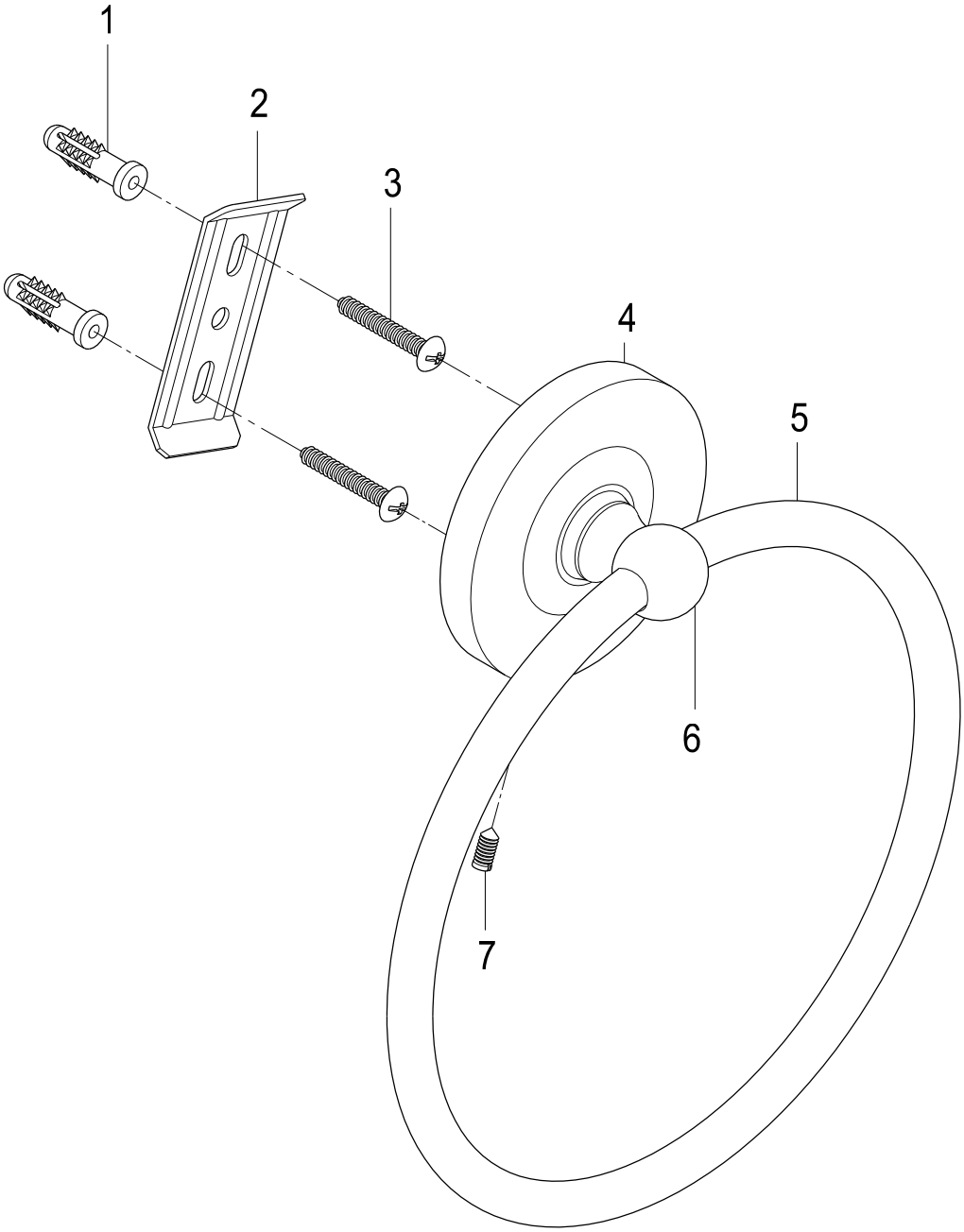

BA317C,PB,ORB,SN

Robe Hook

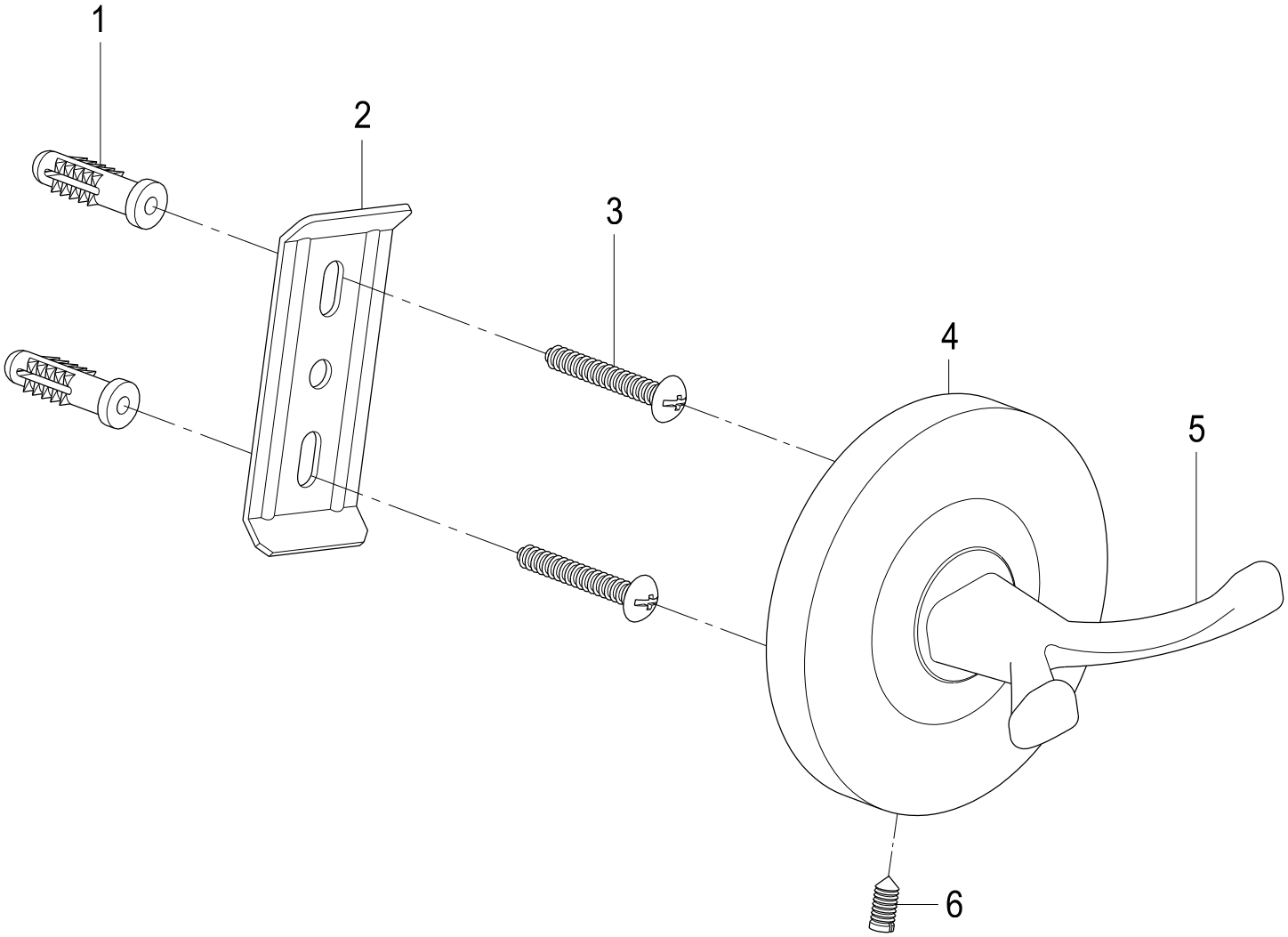

BA318C,PB,ORB,SN
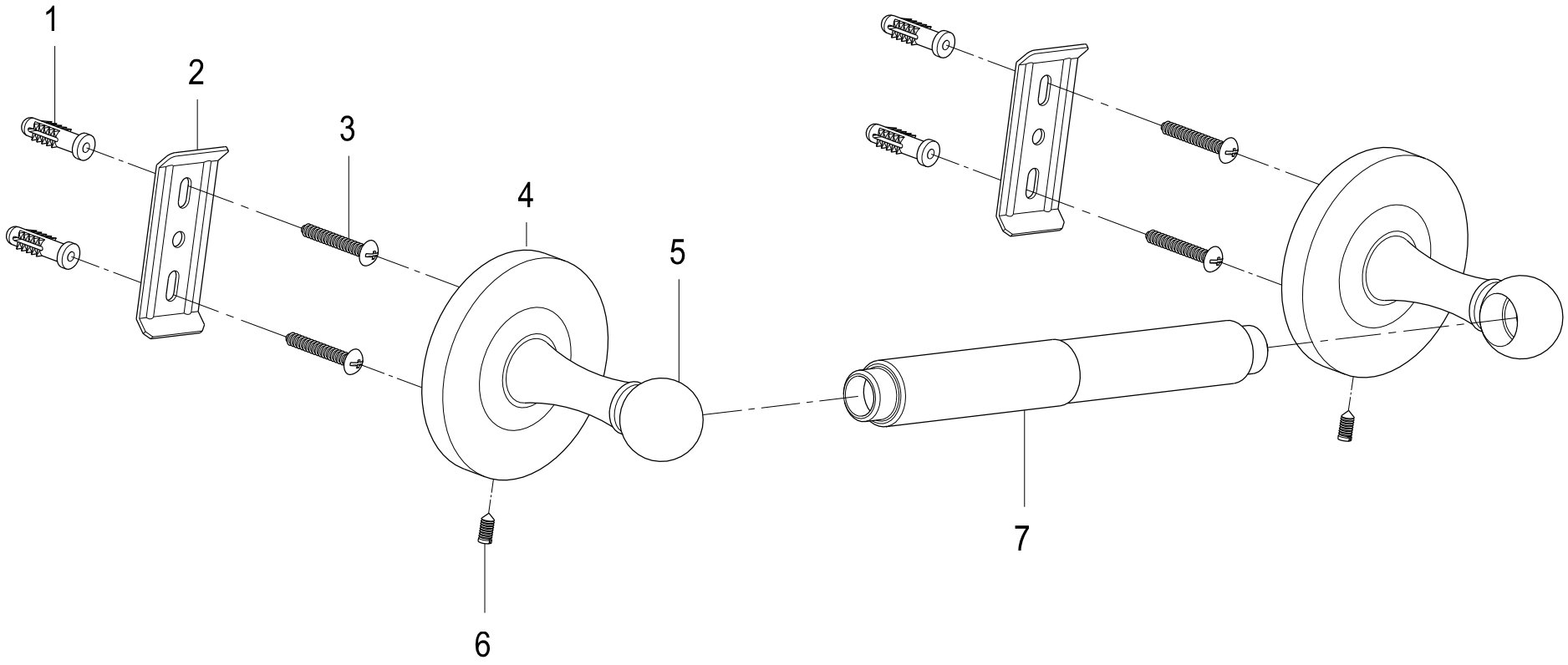
Toilet Paper Holder