HI-TECH KITCHEN FAUCET

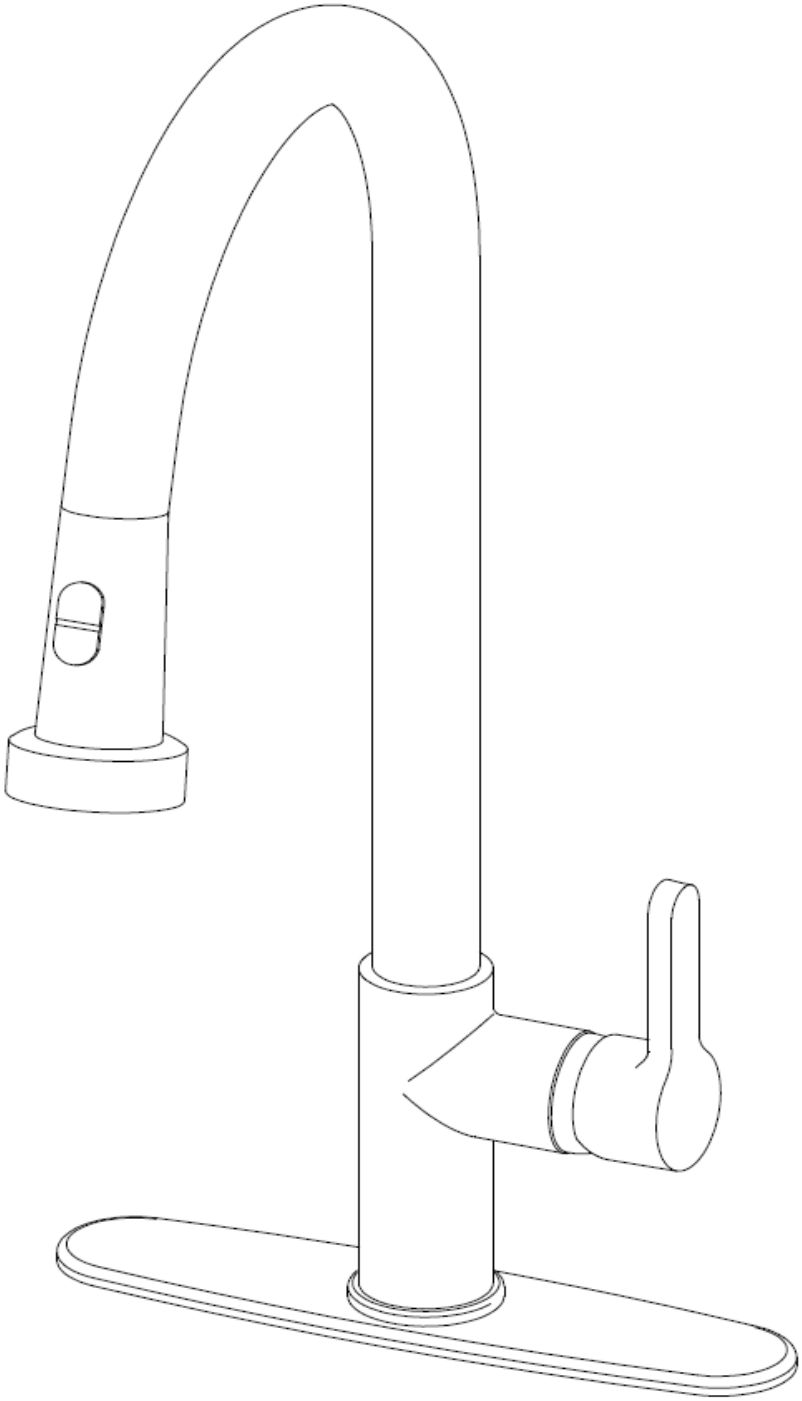

Assembly instruction

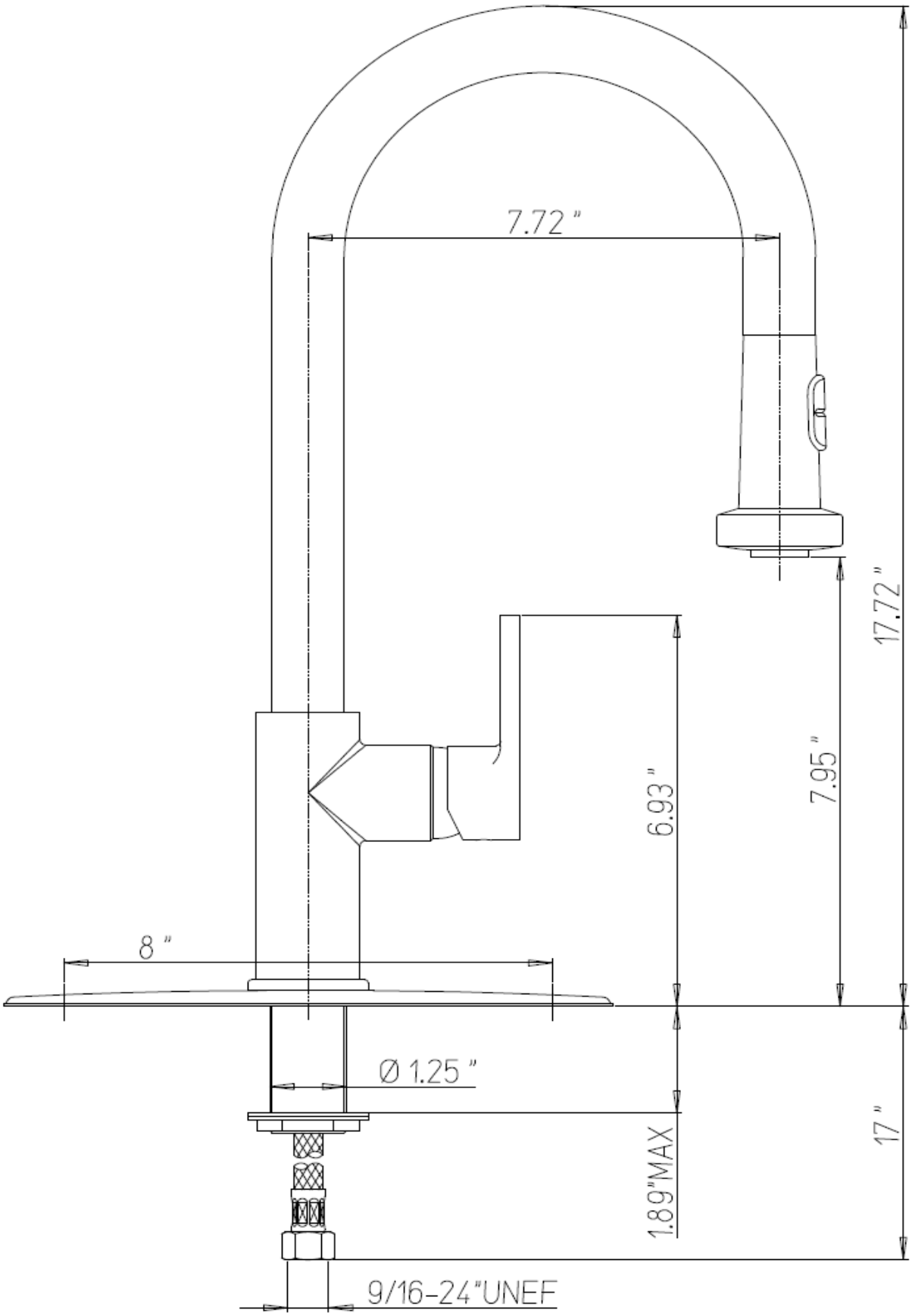
7.72 "
17.72 "
6.93 "
7.95 "
8 "
Ø 1.25 "
17 "
1.89"MAX
9/16-24"UNEF

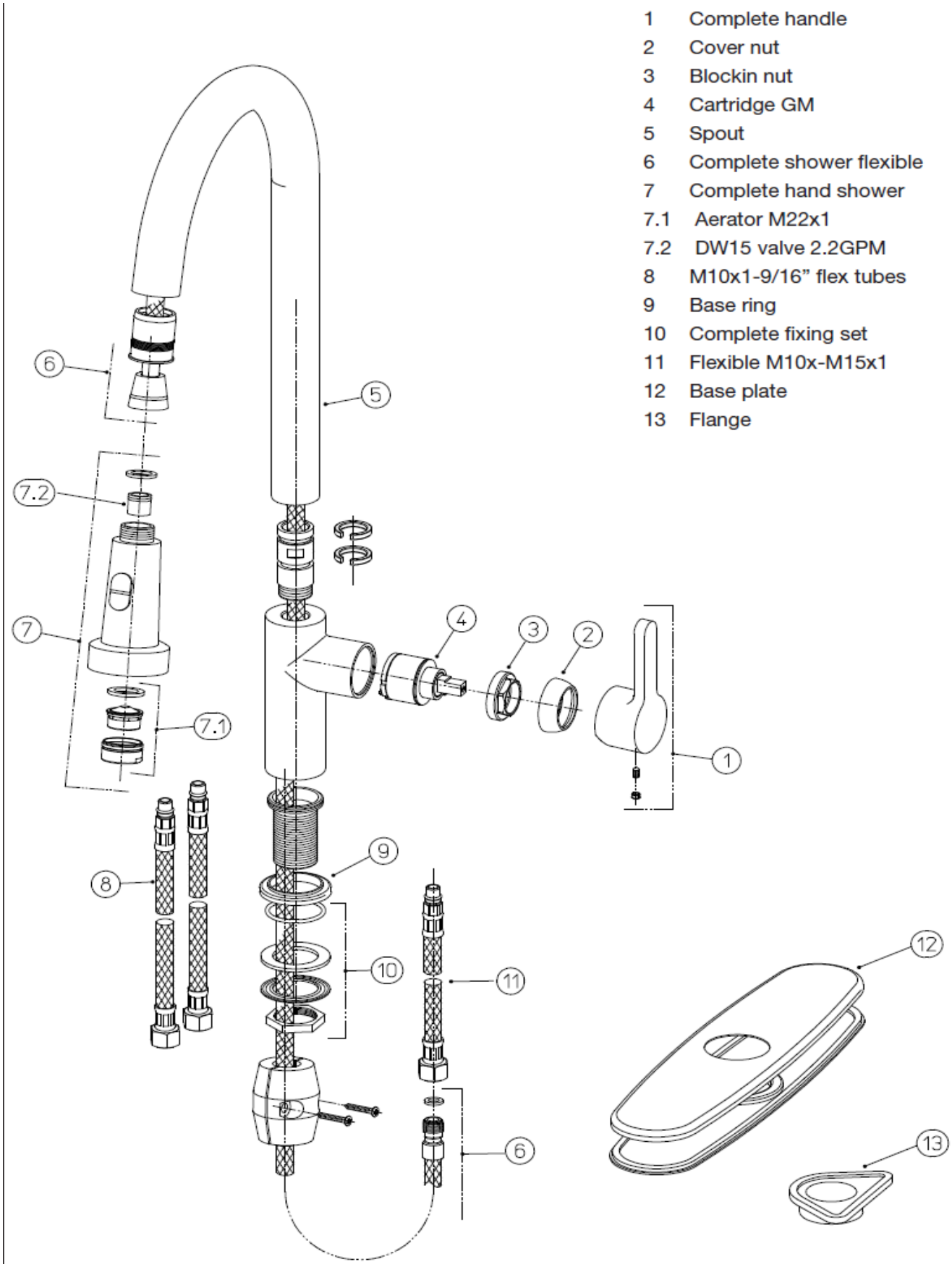
1 Complete handle
2 Cover nut
3 Blockin nut
4 Cartridge GM
5 Spout
6 Complete shower flexible
7 Complete hand shower
7.1 Aerator M22x1
7.2 DW15 valve 2.2GPM
8 M10x1-9/16" flex tubes
9 Base ring
10 Complete fixing set
11 Flexible M10x-M15x1
12 Base plate
13 Flange

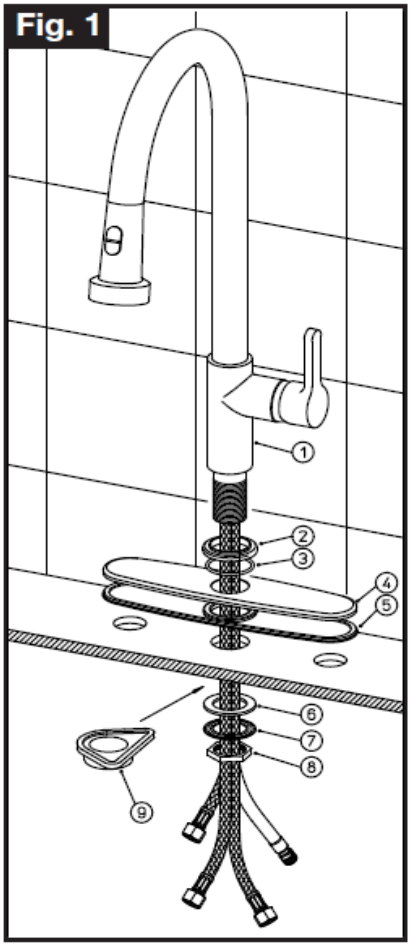
Fig. 1
1
2
3
4
5
6
7
8
9

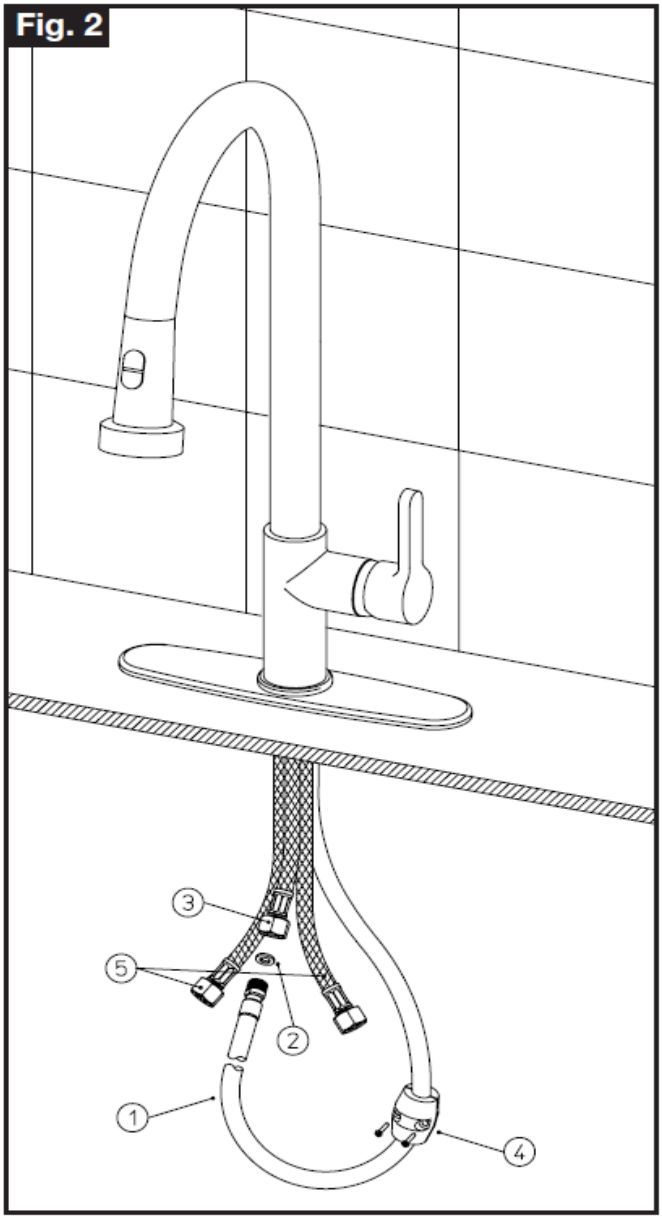
Fig. 2
3
5
2
1
4

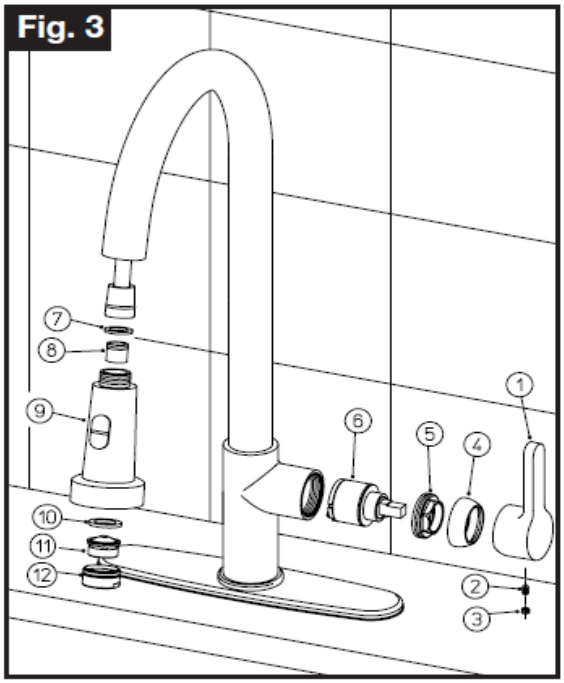
Fig. 3
7
8
9
10
11
12
6
5
4
1
2
3

ASSEMBLY INSTRUCTIONS

General conditions of use			
Water supply	**Suggested**	**Maximum**	**Minimum**
Hot water temperature	**65 C° (~150F)**	**80 C° (~175F)**	**15 C° (~60F)**
Working pressure rating	**3 BAR (~45PSI)**	**5 BAR (~75PSI)**	**0.5 BAR (~7PSI)**

In case of working pressure higher than 75 psi (5 BAR), it would be advisable to install a working pressure reducer. Before starting assembly operations, bleed the pipes of hot and cold water to prevent dirt or other impurities from affecting the operation of the faucet.

INSTALLATION PROCEDURE (Fig.1)
If the sink has three holes use the 8" plate: place the plate (4) on the hole of the sink, placing the plastic sheet (5) in between.
Position the base ring (2) making sure that the washer (3) is correctly placed.
Place the faucet in the hole of the sink,
slip the washer (6) and the flange (7) onto the threaded pin and fix the faucet with the nut (8). Should it be necessary to increase the steadiness of the faucet, use the flange (9) between the washer (6) and the sink.
(Fig.2) Then connect the supply tubes (5): the left one to the hot water supply and the right supply tube to the cold water supply. Connect the spray hose (1) to the exit tube (3) placing in between the washer (2).
Complete the installation by connecting the counterweight (4) and ensure a slide run long enough to pull out the spray.

MAINTENANCE AND TECHNICAL SUGGESTIONS

REPLACEMENT OF THE CARTRIDGE
(shut off the main water supply) (Fig.3)
Take out the cover (3), loosen the grub screw (2), then take out the handle (1); unscrew the cap (4) and the locking nut (5), then take out the cartridge (6).
To assemble proceed in reverse order, making sure the surfaces in contact with the sealing washers are well cleaned. Close the nut (5) in such a way to grant the sealing and in the meantime to allow the handle to turn smoothly.

REPLACEMENT OF THE NO-RETURN VALVE (Fig.3)
To replace the no-return valve in case of bad functioning, unscrew the spray (9) from the spray hose, take out the washer (7) and with a screwdriver take out the no-return valve (8).
To assemble proceed in reverse order, placing the no-return valve (8) as indicated, place the washer (7) correctly in the flexible and screw the spray (9).

CLEANING THE AERATOR (Fig.3)
It is advisable to periodically clean the aerator, in order to avoid build-up of dirt and limestone, which in time could gradually limit the water flow. To disassemble the aerator (12), unscrew it and clean the filter (11) from all impurities, reassemble by proceeding in the reverse order, making sure the gasket (10) is correctly placed.

MAINTENANCE OF THE SURFACES
While cleaning, the surface of the faucet has to be cold (warmth quickens the wearing out of the surface). Look out not to use cleaning products which contain acids or corrosive substances. The faucet has to be daily wiped with a soft cloth. Avoid corrosives, abrasive sponges or any other similar product. Soon after cleaning, wash away with cold water the detergent residues. Damages to our products brought about by a not appropriate treatment are unsecured.

For politics of mutual improvement, the supplier reserves the right to make revisions in product specifications without notice, therefore the images and data contained in this instruction sheet have to be considered as indicative.