6'H X 4'W Gate

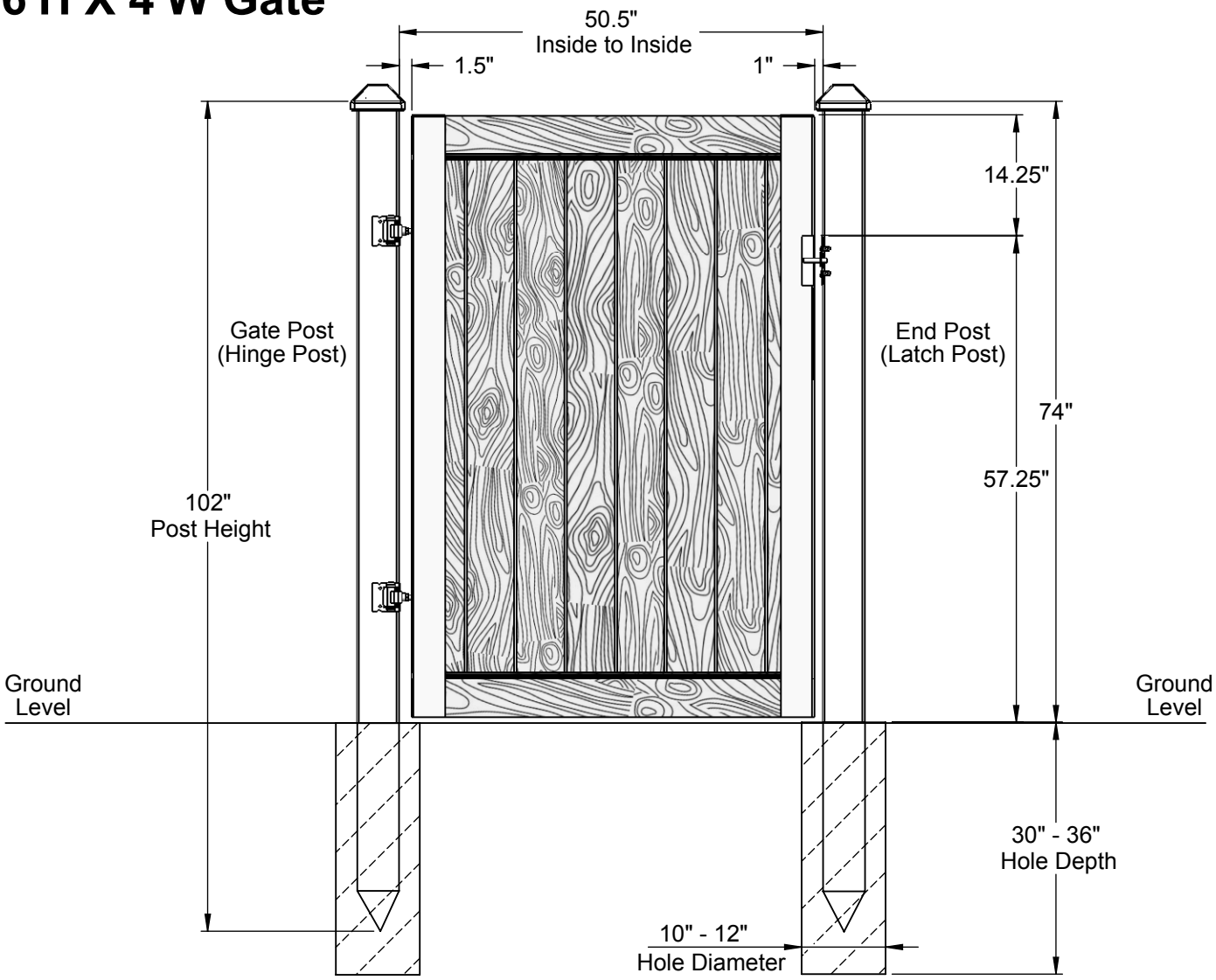

Gate Dimensions

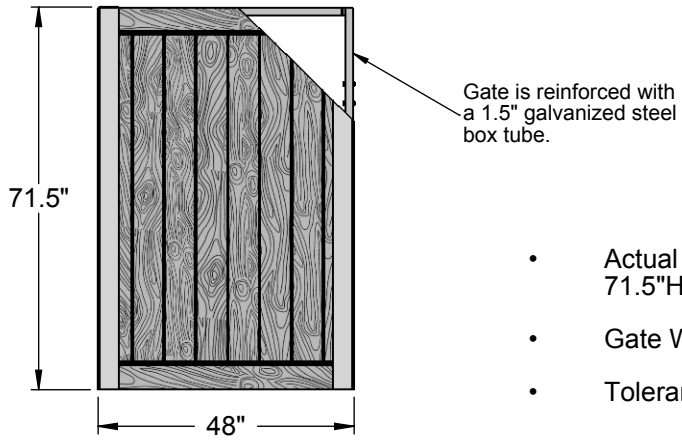

- Actual gate Dimensions: 71.5"H X 48"W
- Gate Weight 67 lbs.
- Tolerances are ±.5"

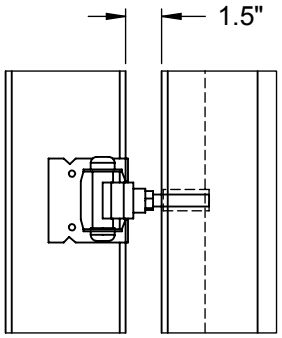

Gate hinge threads into the upper and lower inserts in the gate metal frame leaving about 1.5" from the edge of the gate to the gate post.

Model #:WT72X48	This drawing may not be altered or reproduced without the permission of SimTek™ Fence	
Date: July 22, 2015	Scale: not to scale	REV: A Gleason
Sheet 1 of 1	**U.S. Patents: 7,478,797 / 7,635,114 Foreign Patents Pending**	

SimTek™ FENCE

www.simtekfence.com