SPECIFICATIONS

Approximate Unit Weight (without the battery)	5.5 - 6.5 lbs. (2.5 - 3.0 kg)
Air Volume* (normal / boost)	345 / 415 cfm (9 / 11 m³/min)
Air Speed (Peak)* (normal / boost)	110 / 135 mph (175 / 215 km/h)
Air Speed (Average)* (normal / boost)	90 / 110 mph (140 / 175 km/h)
Battery Type (Model RM4130)	40V, 2.5 Ah Lithium-Ion
Battery Type (Model RM4140)	40V, 4.0 Ah Lithium-Ion
Battery Type (Model RM4150)	40V, 5.0 Ah Lithium-Ion
Approximate Battery Weight (Model RM4130)	1.9 - 2.4 lbs. (0.9 - 1.1 kg)
Approximate Battery Weight (Model RM4140)	2.9 - 3.4 lbs. (1.3 - 1.5 kg)
Approximate Battery Weight (Model RM4150)	3.0 - 3.5 lbs. (1.4 - 1.6 kg)
Optimum Battery Charging Temperature	32° to 104° F (0° to 40° C)
Optimum Battery Storage Temperature	64° to 73° F (18° to 23° C)
Optimum Battery In-Use Temperature	32° to 113° F (0° to 45° C)
Battery Charger Input	120 V 60 Hz AC only
Battery Charger Output	1.8 A 40 V DC
Approximate Charging Time (Model RM4130)	105 minutes
Approximate Charging Time (Model RM4140)	135 minutes
Approximate Charging Time (Model RM4150)	162 minutes
Approximate Battery Charger Weight	1.25 - 1.75 lbs. (0.6 - 0.8 kg)

All specifications are based on the latest product information available at the time of printing. We reserve the right to make changes at any time without notice.

* Measured per ANSI B175.2.

ASSEMBLY

WARNING: To prevent serious personal injury and damage to the unit, never assemble, disassemble or adjust the unit while it is running. Always turn the unit off and remove the battery to prevent the unit from starting accidentally. Always allow the unit to cool before assembling, disassembling or making any adjustments.

WARNING: To prevent serious personal injury, never operate the unit without the blower tube firmly installed.

INSTALLING AND REMOVING THE BLOWER TUBE

Installing the Blower Tube

1. Set the unit on a flat, level surface.
2. Align the slot on the blower tube with the tab on the blower outlet (Fig. 1).
3. Push the blower tube onto the blower outlet.
4. Hold the handle firmly for leverage. Turn the blower tube clockwise until it locks into place (Fig. 1).

Removing the Blower Tube

1. Set the unit on a flat, level surface.
2. Hold the handle firmly for leverage. Turn the blower tube counterclockwise to unlock it from the blower outlet (Fig. 1).
3. Remove the blower tube from the blower outlet.

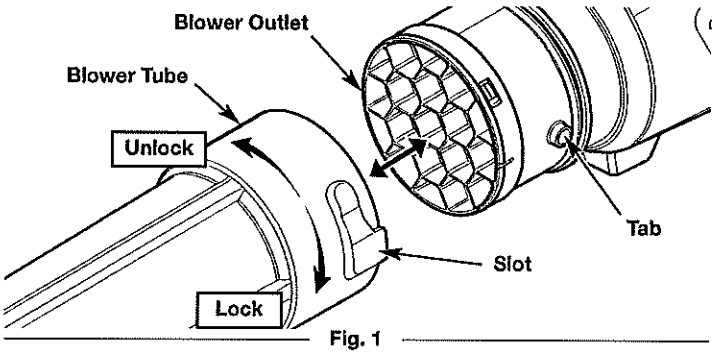

Fig. 1

WALL-MOUNTING THE CHARGER (OPTIONAL)

The battery charger can be mounted to a permanent surface, such as a wall or work bench. Use mounting fasteners (not included) capable of supporting the combined weight of the battery and battery charger. Wall-mounting holes are located on the bottom of the charger (Fig. 2).

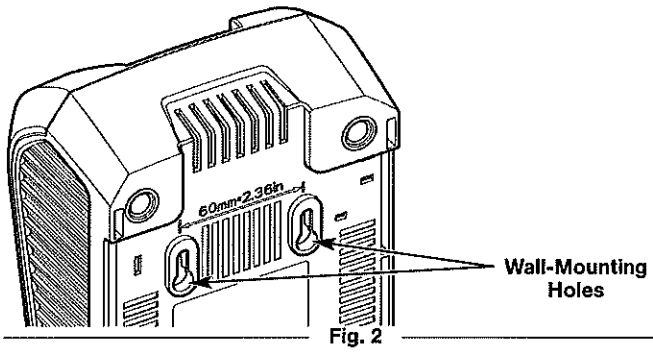

Fig. 2

CHARGING THE BATTERY

NOTE: The battery is not shipped fully charged.

NOTE: Lithium-ion batteries will not develop a memory and may be charged at any time.

For maximum run time, fully charge the battery before each use.

1. Plug the battery charger into an appropriate power outlet. The LED should turn red (constant) (Fig. 4). If it does not:
   - Make sure the battery charger is fully plugged into an appropriate power outlet.
   - Make sure the power outlet is functioning by testing it with another electrical device.
2. Insert the battery into the charging dock (Fig. 3). Push the battery firmly until it locks into place.
3. Examine the LED. The LED will indicate the battery status:
   - **Green (blinking):** The battery is charging. Charge the battery until the green light stops blinking.
   - **Green (constant):** The battery is fully charged.
   - **Red (blinking - slow):** The battery and/or charger are too hot or too cold. Make sure the battery and charger are in an environment between 32° and 104° F (0° and 40° C). Allow time for the battery and/or charger to warm up or cool down.
   - **Red (blinking - fast):** The battery is no longer functional. Refer to the *Warranty* section for replacement information.
   - **Red (constant):** The battery is not charging. Remove the battery. Make sure the terminals on the battery and battery charger are clean. Re-insert the battery into the charging dock. Push the battery firmly until it locks into place.
4. To maximize the life of the battery, the battery charger will turn off when charging is complete. Once the battery is fully charged, remove it from the battery charger. Optionally, the battery can be stored in the battery charger, but the battery charger should be unplugged from the power outlet.

   To remove the battery: Hold the battery charger in place with one hand. Press the battery release button with the other hand (Fig. 5). Slide the battery out of the charging dock.

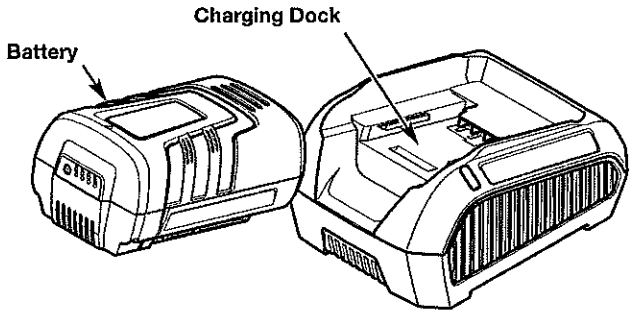

Fig. 3

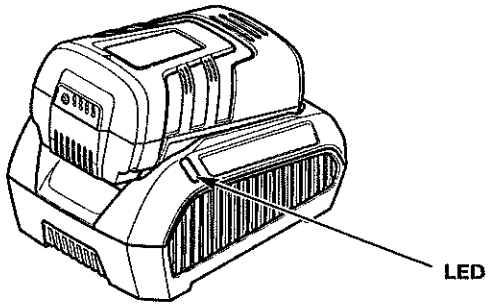

Fig. 4

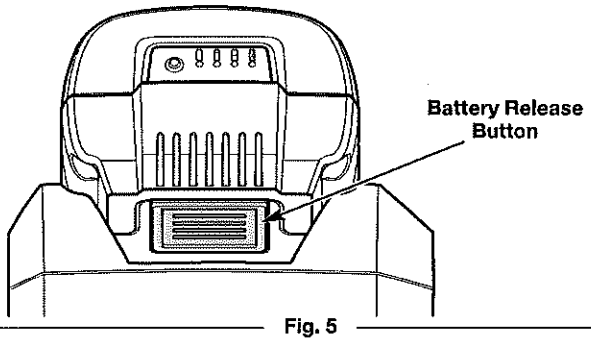

Fig. 5

INSTALLING AND REMOVING THE BATTERY

WARNING: Avoid accidentally starting the unit. To prevent serious injury, **DO NOT** squeeze the trigger when installing or removing the battery. Refer to *Starting and Stopping*. Remove the battery from the unit when it is not in use.

Installing the Battery

1. Grasp the handle firmly (Fig. 6). **DO NOT** squeeze the trigger. Refer to *Starting and Stopping*.
2. Slide the battery into the battery port (Fig. 6). Push the battery firmly until the battery locks into place (Fig. 6). There should be an audible "click."
3. Gently pull the battery to make sure it is securely locked in place.

Removing the Battery

1. Grasp the handle firmly (Fig. 6). **DO NOT** squeeze the trigger. Refer to *Starting and Stopping*.
2. Press the battery release button to unlock the battery (Fig. 6).
3. Pull the battery out of the battery port (Fig. 6).

NOTE: It may require a strong pull to remove the battery.

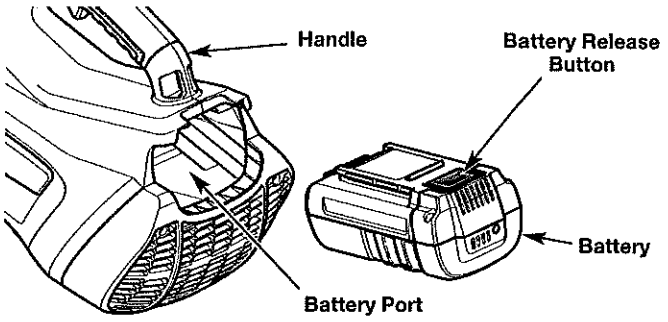

Fig. 6

STARTING AND STOPPING

WARNING: When starting the unit, make sure it is not directed toward people, animals, windows, automobiles or loose debris.

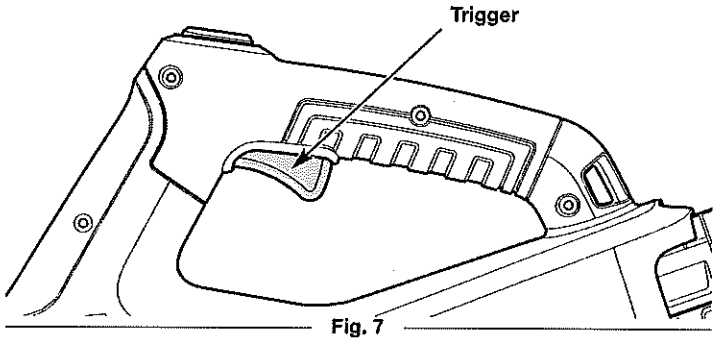

Fig. 7

STARTING INSTRUCTIONS

1. Install the battery. Refer to *Installing the Battery*.
2. Squeeze and hold the trigger to start the unit (Fig. 7).
3. Squeeze the trigger to the degree needed for the operation.

STOPPING INSTRUCTIONS

1. Release the trigger (Fig. 7).
2. Wait for all moving parts to come to a complete stop.