REVISIONS				
ZONE	REV.	DESCRIPTION	DATE	APPROVED

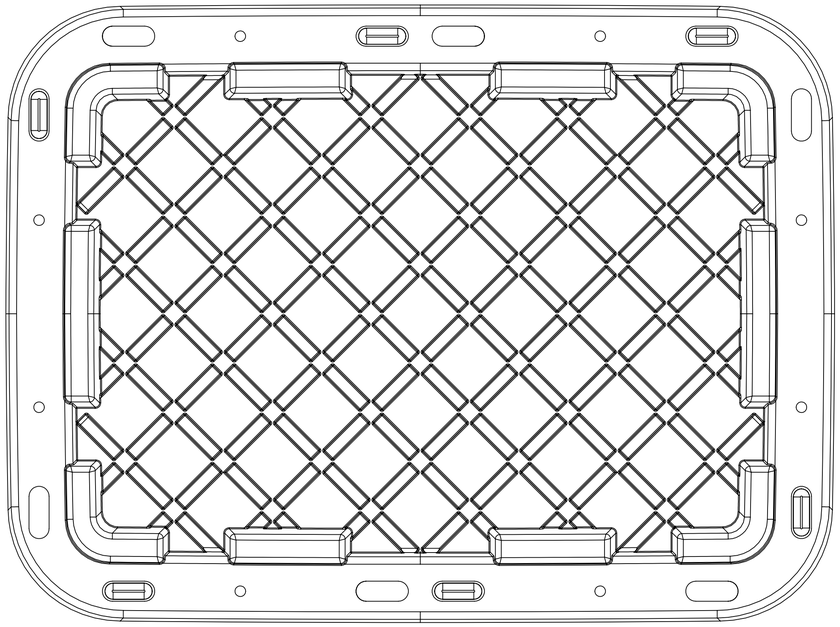

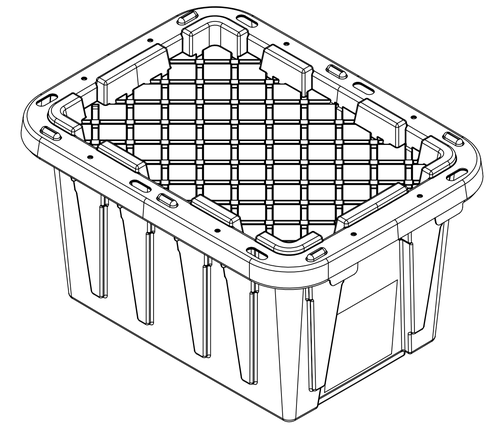

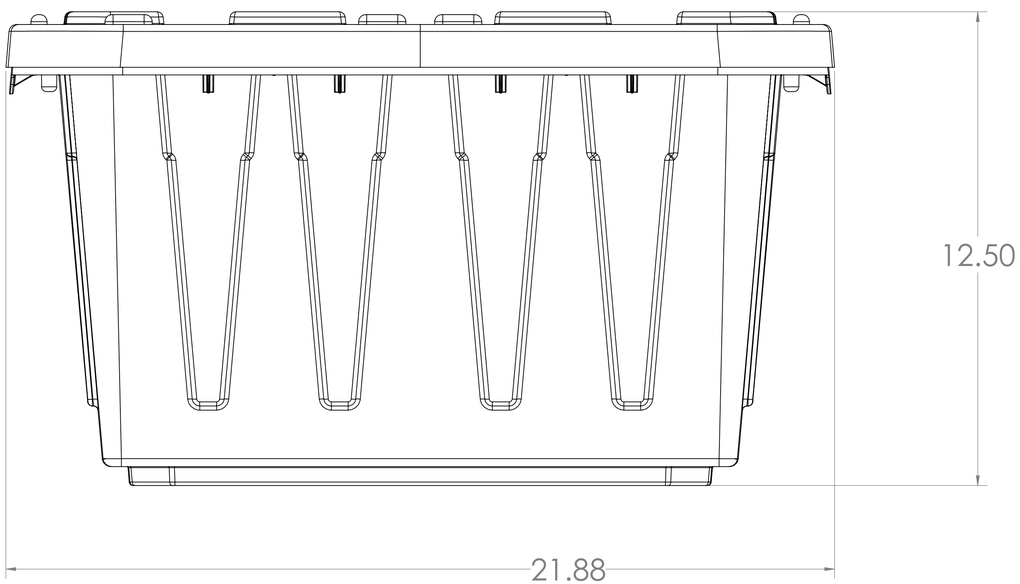

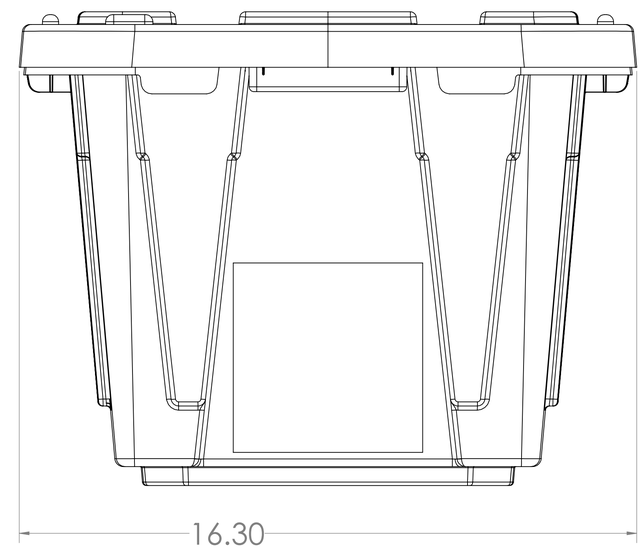

ITEM NO.	DESCRIPTION	Weight	QTY.
1	12 GALLON BIN	3.1	1
2	12 GALLON LID	1.4	1

PROPRIETARY AND CONFIDENTIAL
THE INFORMATION CONTAINED IN THIS DRAWING IS THE SOLE PROPERTY OF CREATIVE PLASICS CONCEPTS. ANY REPRODUCTION IN PART OR AS A WHOLE WITHOUT THE WRITTEN PERMISSION OF CREATIVE PLASICS CONCEPTS IS PROHIBITED.

NEXT ASSY | USED ON
APPLICATION

UNLESS OTHERWISE SPECIFIED:
DIMENSIONS ARE IN INCHES
TOLERANCES:
FRACTIONAL ±
ANGULAR: MACH ± BEND ±
TWO PLACE DECIMAL ±
THREE PLACE DECIMAL ±
INTERPRET GEOMETRIC TOLERANCING PER:
MATERIAL
FINISH

	NAME	DATE
DRAWN		
CHECKED		
ENG APPR.		
MFG APPR.		
Q.A.		

COMMENTS:

CREATIVE PLASTIC CONCEPTS

TITLE:
12 GALLON BIN ASSEMBLY

SIZE D | DWG. NO. | REV
SCALE: 1:2 | WEIGHT: 4.4 | SHEET 1 OF 1

REVISIONS				
ZONE	REV.	DESCRIPTION	DATE	APPROVED

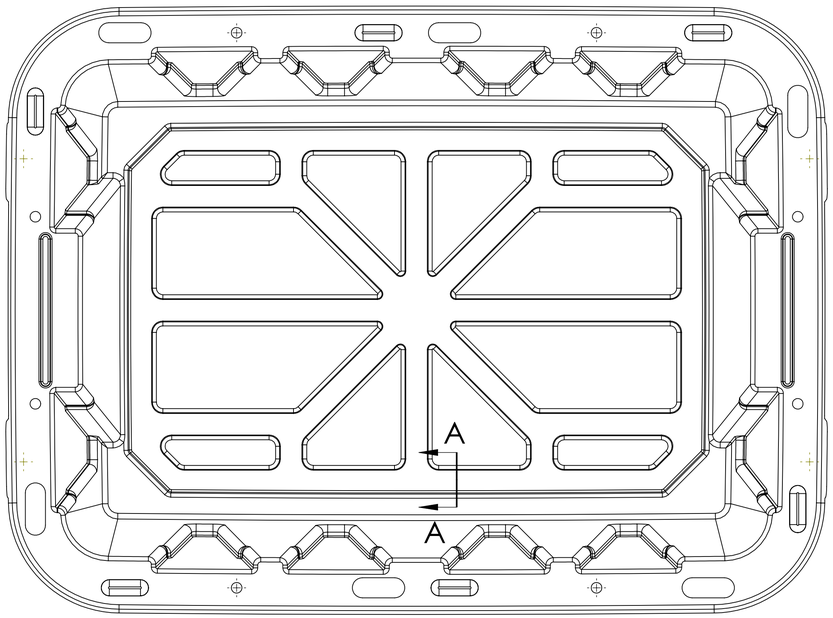

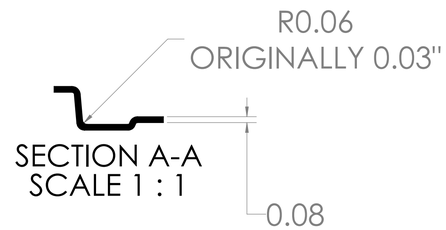

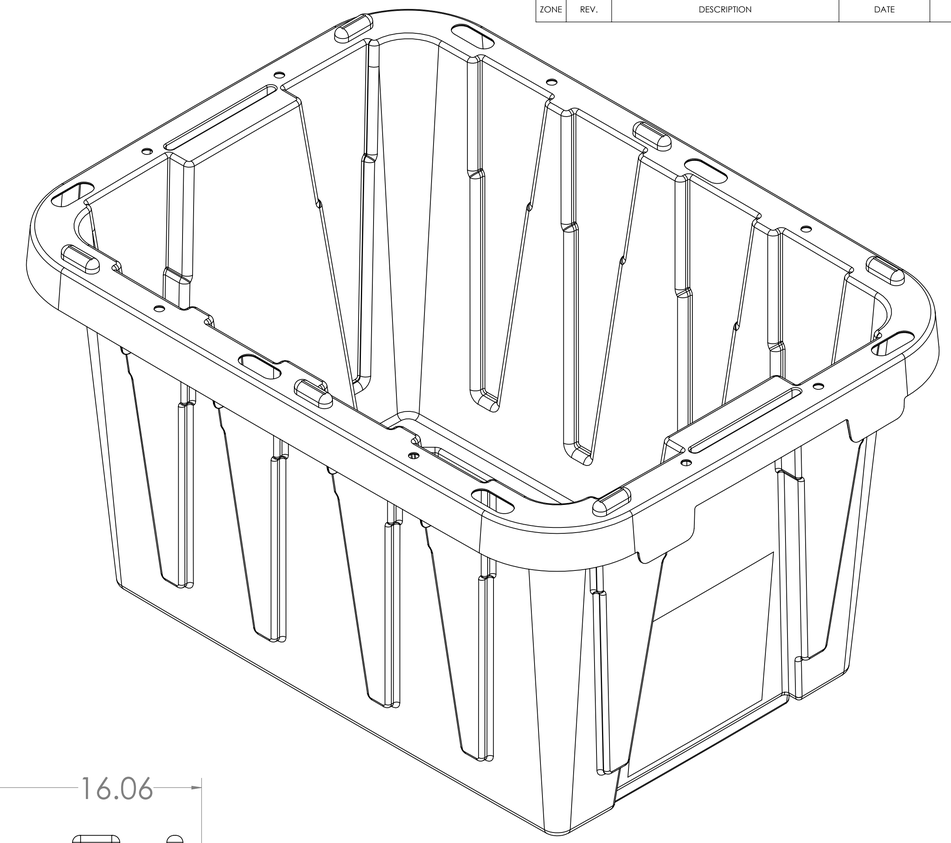

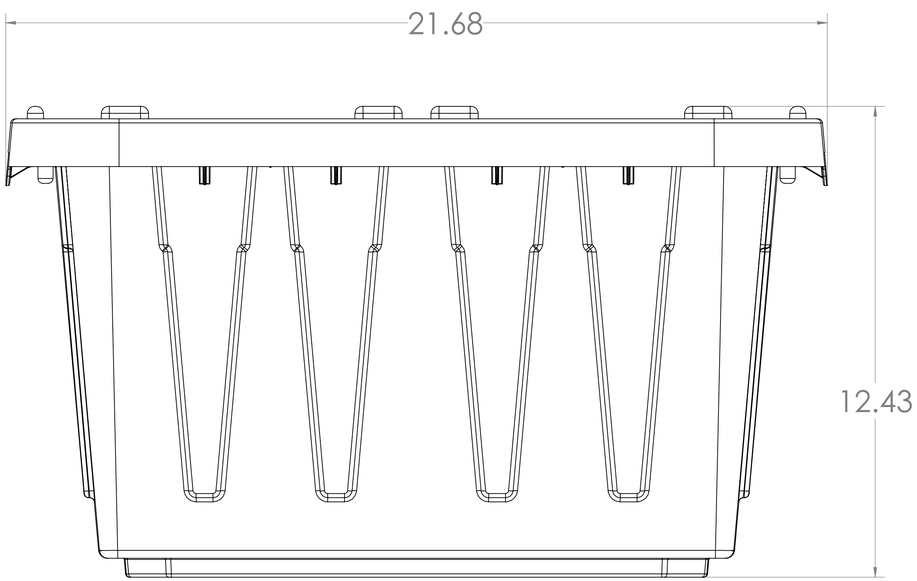

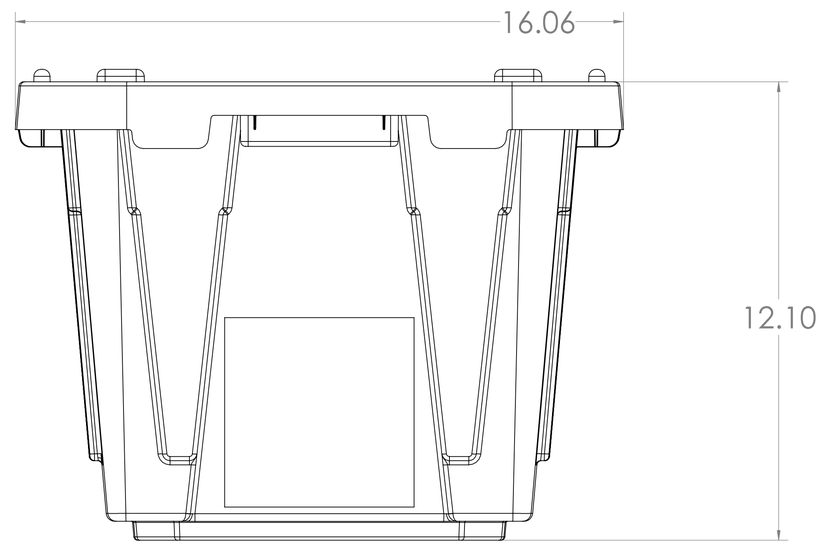

ITEM NO.	DESCRIPTION	Weight	QTY.
1	12 GALLON BIN	3.1	1

UNLESS OTHERWISE SPECIFIED:
DIMENSIONS ARE IN INCHES
TOLERANCES:
FRACTIONAL ±
ANGULAR: MACH ± BEND ±
TWO PLACE DECIMAL ±
THREE PLACE DECIMAL ±

INTERPRET GEOMETRIC TOLERANCING PER:

MATERIAL
PP Homopolymer

FINISH

NEXT ASSY | USED ON

APPLICATION

	NAME	DATE
DRAWN		
CHECKED		
ENG APPR.		
MFG APPR.		
Q.A.		

COMMENTS:

PROPRIETARY AND CONFIDENTIAL
THE INFORMATION CONTAINED IN THIS DRAWING IS THE SOLE PROPERTY OF CREATIVE PLASTICS CONCEPTS. ANY REPRODUCTION IN PART OR AS A WHOLE WITHOUT THE WRITTEN PERMISSION OF CREATIVE PLASTICS CONCEPTS IS PROHIBITED.

CREATIVE PLASTIC CONCEPTS

TITLE:
12 GALLON BIN

SIZE D | DWG. NO. | REV

SCALE: 1:2 | WEIGHT: 3.0 | SHEET 1 OF 1